TEETH NO. : 22

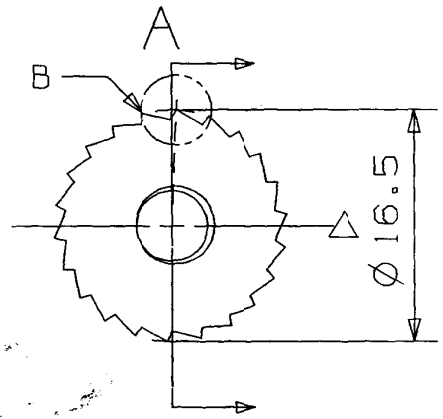


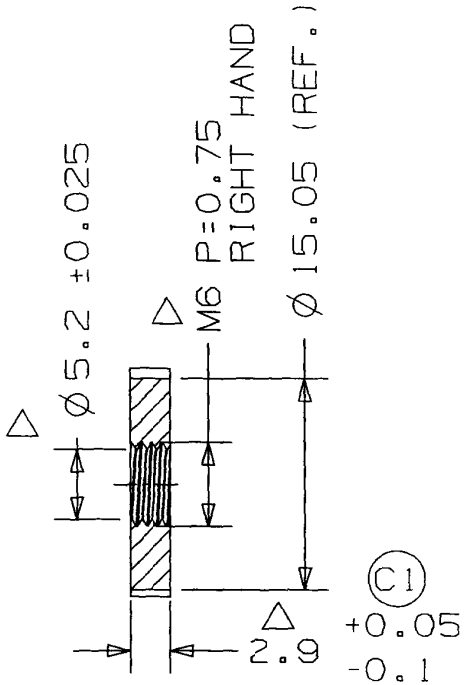


SECTION A-A

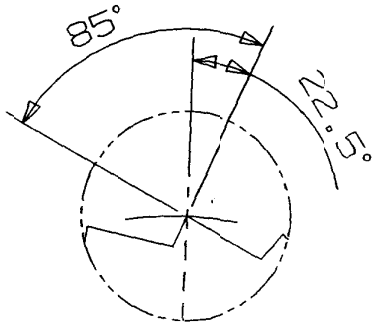


DETAIL : B
SCALE : 6:1

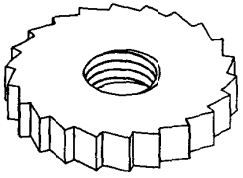

GENERAL NOTE:

1. UNLESS OTHERWISE SPECIFIED:
   (a) GENERAL WALL THICKNESS TO BE - -MM.
   (b) GENERAL CORNER FILLET RADII TO BE - -MM.
   (c) GENERAL DRAFT ANGLE TO BE - -° DEG PER SIDE.
   (d) GENERAL TOLERANCE TO BE:

| | | MM | INCH |
|---|---|---|---|
| (1) FOR IN-HSE PLASTIC | .XXX | --- | ±.005 |
| | X.XX | ±0.05 | ±.01 |
| | XX.XX | ±0.10 | ±.01 |
| | X.X | ±0.1 | --- |
| | XX.X | ±0.2 | --- |
| | XXX.X | ±0.5 | --- |
| (2) FOR IN-HSE METAL | .XXX | --- | ±.005 |
| | .XX | ±0.05 | ±.01 |
| | .X | ±0.1 | --- |
| HOLES ON CENTERLINES WITHIN | | 0.05 | .002 |
| ALLOWABLE CONCENTRICITY T.I.R. | | 0.05 | .002 |
| ANGULAR | ±0.5° | | |

2. SYMBOL △ TO BE CRITICAL/CONTROL DIMENSION.
3. SYMBOL ○ TO BE REVISED DIMENSION.
4. (C3) MATERIAL SPECIFICATION: SUS420J2
5. (C2) FINISH SPECIFICATION: HRC 55+/-2 ELECTRICAL POLISHING

| CODE | REVISION | BY | DATE |
|---|---|---|---|
| | C3 WAS SAE 1045(=S45C) | | |
| | C2 WAS HRC 55+/-2 NICKEL PLATED | | |
| C | C1 ADD 2.9+0.15/-0.1 | | |

SIMA TELEX MANUFACTORY CO., LTD.

MODEL: F220837L1

TITLE: GEAR

TYPE: ME | PL | PU (X) | ASS'Y | PACK

SCALE: 2:1

SHEET: 1 OF 1

CUSTOMER REF.:

DRAWING NO.: 50092 | REV: C | UNIT: MM

DRAWING RELEASE FOR
☒ FINAL PRODUCTION
☐ NEW TOOLING
☐ QUOTATION & SAMPLE

DRAWN BY: DATE:
REVIEWED BY: DATE:
APPROVED BY: DATE: